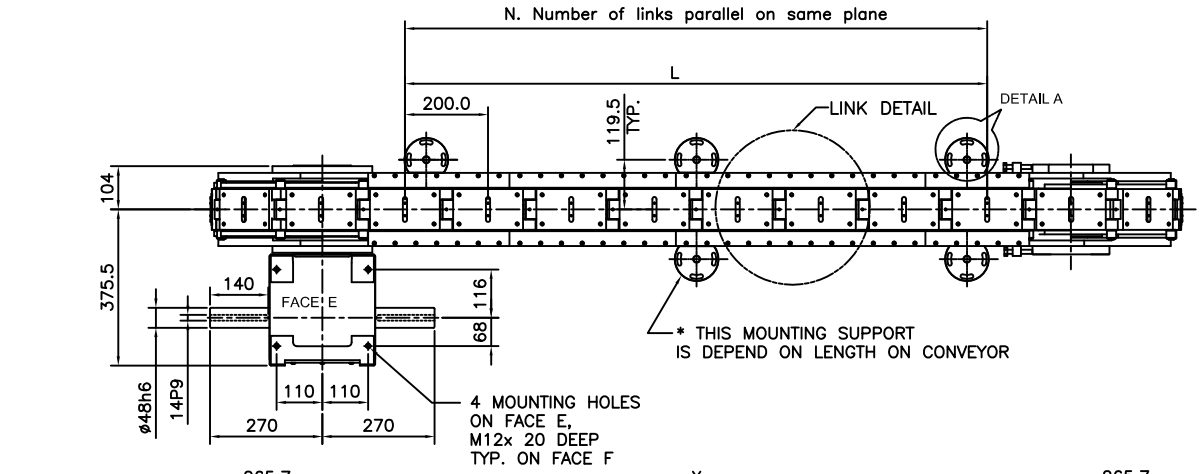

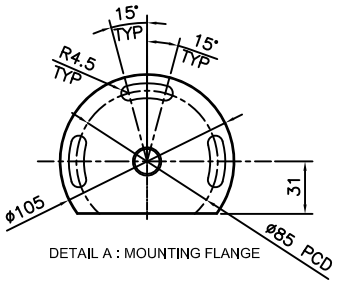

DETAIL A : MOUNTING FLANGE

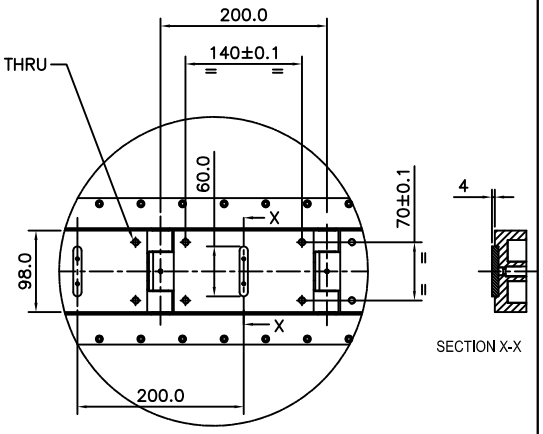

LINK DETAIL

SECTION X-X

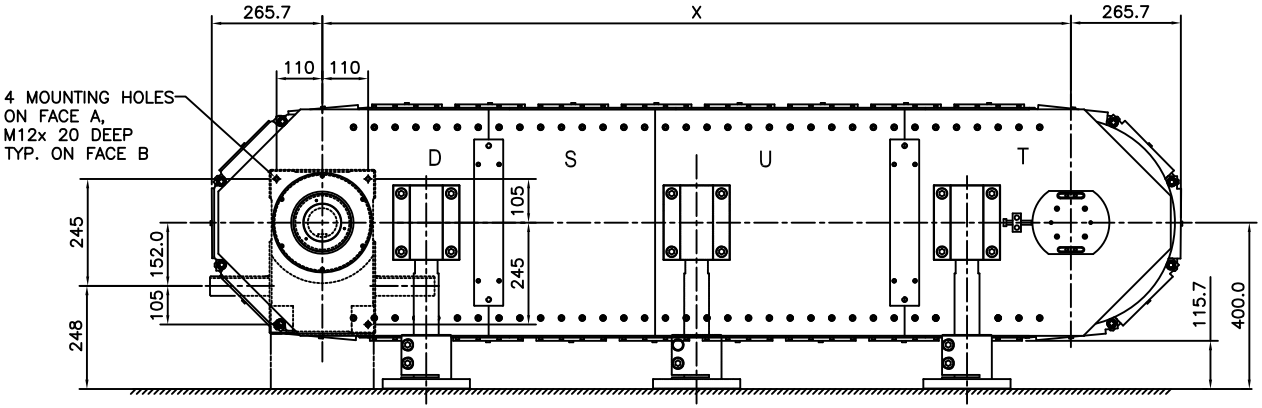

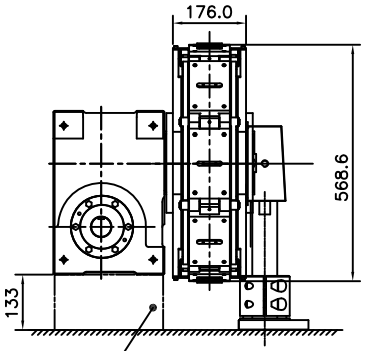

SUPPORT TO BE PROVIDE
FOR INDEXER

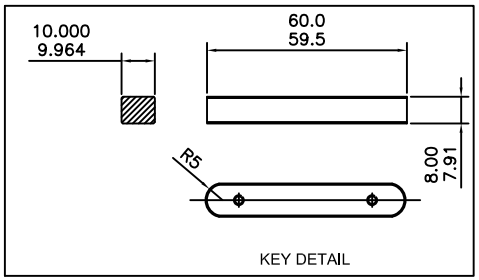

KEY DETAIL

NO. OF LINKS**	X	L	N	COMPOSITION
16	800	400	3	D+T
20	1200	800	5	D+S+T
22	1400	1000	6	D+U+T
24	1600	1200	7	D+S+S+T
26	1800	1400	8	D+S+U+T
28	2000	1600	9	D+U+U+T
30	2200	1800	10	D+S+U+S+T
32	2400	2000	11	D+U+S+U+T
34	2600	2200	12	D+U+U+U+T
36	2800	2400	13	D+U+S+S+U+T
38	3000	2600	14	D+U+U+S+U+T

DENOTION :
T : TAKE UP END = 450mm
D : DRIVE END = 350mm
S : 400mm MODULE = 400mm
U : 600mm MODULE = 600mm
LINK MATERIAL : Alluminium or Steel
LINK WEIGHT : Steel=3.4kg, Alluminium = 1.2Kg

INDEX DRIVE	INDEX DETAILS	
	STOPS	STROKE (mm)
GC150	8	200

NOTES –
1) ** FOR LONGER LENGTH PLEASE CONSULT PACKAM
2) # MOUNTING SUPPORT DEPEND ON LENGTH OF CONVEYOR
3) TECHNICAL SPECIFICATION AND DRAWINGS MAY CHANGE WITHOUT NOTICE. KINDLY CONTACT PACKAM FOR LATEST VERSION.

ALL DIMENSIONS ARE IN mm UNLESS OTHERWISE SPECIFIED

Packam®

PACKAM CONTROLS PRIVATE LIMITED

PREMIUM PACKAM SERIES
STANDARD INSTALLATION DRAWING–LC200 WITH GC150 OVER–UNDER

DRAWN BY	CHECKED BY	DATE	SCALE	DRAWING No.	ISSUE
PMB	KP	12.10.17	NTS	LC200–XX–S–V–01–X	2

A4