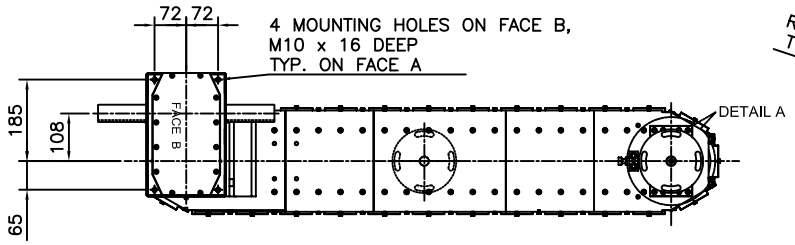

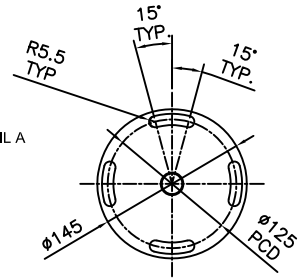

DETAIL A : MOUNTING FLANGE

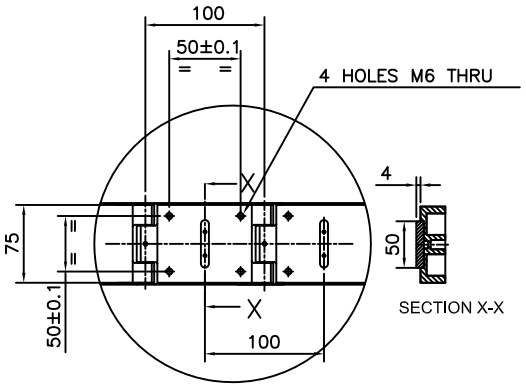

SECTION X-X

LINK DETAIL

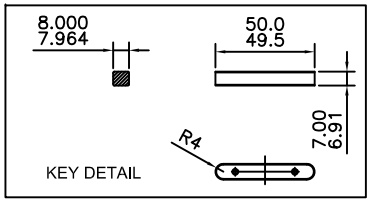

KEY DETAIL

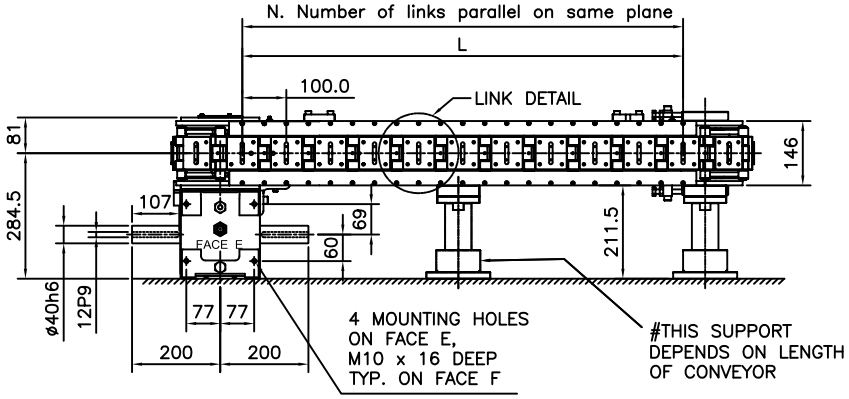

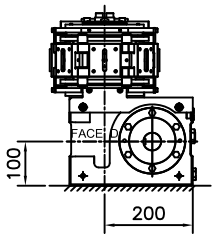

**NO. OF LINKS	X	L	N	COMPOSITION
14	400	300	4	D+T
18	600	500	6	D+P+T
20	700	600	7	D+Q+T
22	800	700	8	D+P+P+T
24	900	800	9	D+P+Q+T
26	1000	900	10	D+Q+Q+T
28	1100	1000	11	D+P+Q+P+T
30	1200	1100	12	D+Q+P+Q+T
32	1300	1200	13	D+Q+Q+Q+T
34	1400	1300	14	D+P+Q+Q+P+T
36	1500	1400	15	D+Q+Q+P+Q+T
38	1600	1500	16	D+Q+Q+Q+Q+T
40	1700	1600	17	D+P+Q+Q+Q+P+T
42	1800	1700	18	D+Q+Q+P+Q+Q+T
44	1900	1800	19	D+Q+Q+Q+Q+Q+T

**NO. OF LINKS	X	L	N	COMPOSITION
46	2000	1900	20	D+Q+Q+P+P+Q+Q+T
48	2100	2000	21	D+Q+Q+Q+P+Q+Q+T
50	2200	2100	22	D+Q+Q+Q+Q+Q+Q+T
52	2300	2200	23	D+Q+Q+Q+P+P+Q+Q+T
54	2400	2300	24	D+Q+Q+Q+P+Q+Q+Q+T
56	2500	2400	25	D+Q+Q+Q+Q+Q+Q+Q+T
58	2600	2500	26	D+Q+Q+Q+P+P+Q+Q+Q+T
60	2700	2600	27	D+Q+Q+Q+Q+P+Q+Q+Q+T
62	2800	2700	28	D+Q+Q+Q+Q+Q+Q+Q+Q+T
64	2900	2800	29	D+Q+Q+Q+P+P+Q+Q+Q+Q+T
66	3000	2900	30	D+Q+Q+Q+Q+P+Q+Q+Q+Q+T

DENOTION :
T : TAKE UP END = 175mm
D : DRIVE END = 225mm
P : 200mm MODULE = 200mm
Q : 300mm MODULE = 300mm
LINK MATERIAL : ALLUMINIUM OR STEEL
LINK WEIGHT : ALLUMINIUM=0.604kg, STEEL=1.354 kg

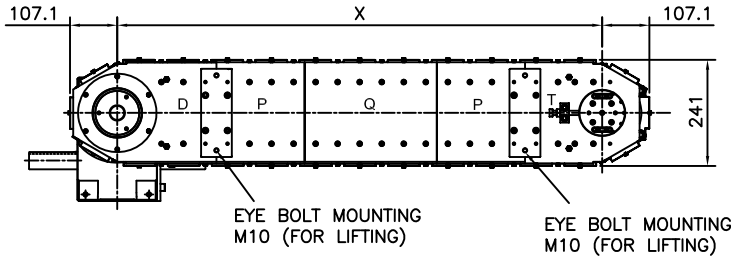

INDEX DRIVE	INDEX DETAILS	
	STOPS	STROKE (mm)
GC110	6	100
GC110	3	200

NOTES –
1) ** FOR LONGER LENGTH PLEASE CONSULT PACKAM
2) # MOUNTING SUPPORT DEPEND ON LENGTH OF CONVEYOR
3) TECHNICAL SPECIFICATION AND DRAWINGS MAY CHANGE WITHOUT NOTICE. KINDLY CONTACT PACKAM FOR LATEST VERSION.

ALL DIMENSIONS ARE IN mm UNLESS OTHERWISE SPECIFIED

Packam®

PACKAM CONTROLS PRIVATE LIMITED

PREMIUM PACKAM SERIES

STANDARD INSTALLATION DRAWING–LC100 CARAOUSAL WITH GC110

DRAWN BY	CHECKED BY	DATE	SCALE	DRAWING No.	ISSUE
PMB	KP	22.09.17	NTS	LC100–XX–S–H–01–X	3

A4