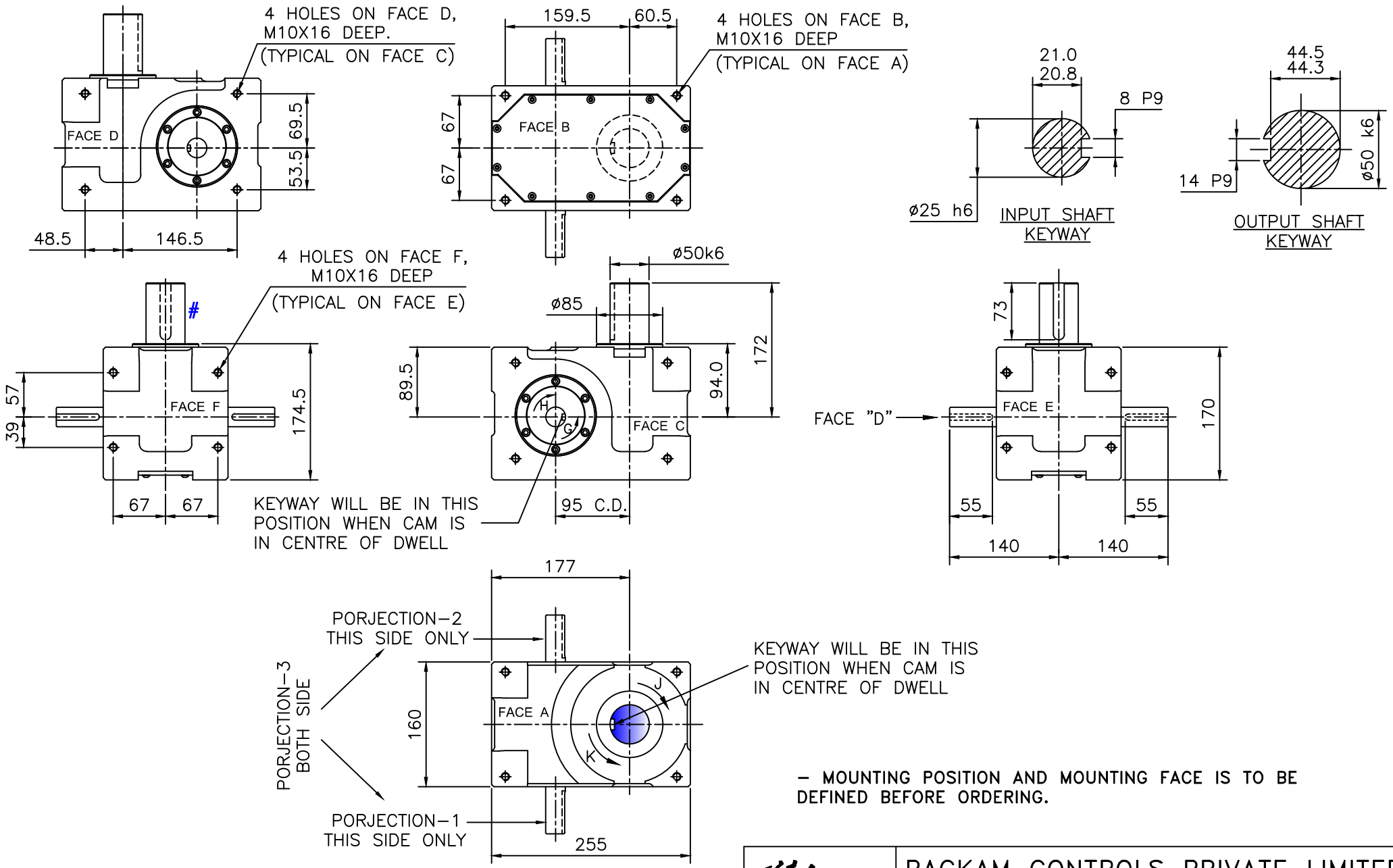

– MOUNTING POSITION AND MOUNTING FACE IS TO BE DEFINED BEFORE ORDERING.

INDEXING SHAFT (ø50) IS INDICATED IN BLUE COLOR.

ALL DIMENSIONS ARE IN mm UNLESS OTHERWISE SPECIFIED

Packam

PACKAM CONTROLS PRIVATE LIMITED

PREMIUM PACKAM SERIES

STANDARD INSTALLATION DRAWING–GC95–S (SHAFT TYPE)

DRAWN BY	CHECKED BY	DATE	SCALE	DRAWING No.	ISSUE
PMB	SN	15.11.16	~	GC095S–H–S–001–X	1

KINDLY CONTACT PACKAM FOR LATEST VERSION

A4