Packam®

South Asia

EN ISO 12100:2010

Precision Link Conveyor

General Installation, Operation & Service Instructions

LC100, LC150, LC200

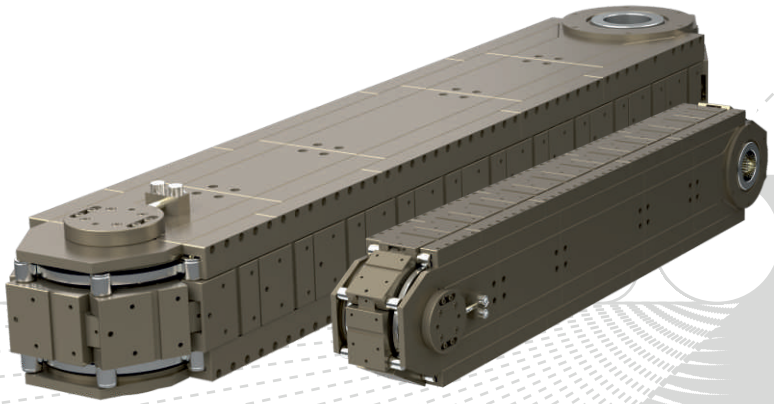

GENERAL INFORMATION

1. GENERAL INFORMATION

1.1 Identification

1.1.1 Product identification

Manufacturer:	PACKAM CONTROLS PRIVATE LIMITED
Address:	Patel Vanika, Western Express Highway, Goregaon(East)
City:	Mumbai
Tel.:	+91 2261206600
E-mail:	info@packam.co.in
Internet:	www.packam.co.in
After-Sales Service E-mail:	service@packam.co.in
Machine designation:	PRECISION LINK CONVEYOR
Type designation:	LC

1.1.2 Document identification

Version:	1.0
Creation date:	27th October 2017
Last revision:	NA

1.1.3 Products

Model No LC series:	LC100, LC150 & LC200

1.2 Copyright

All right in this document are the copyright of PACKAM CONTROLS PRIVATE LIMITED

Reproduction or assignment to third parties of this manual, in whole or in parts, is forbidden. All rights reserved. This document is only intended for the user of the product described.

1.3 Reference rules

-2006/42/EC Machinery Directive

- EN 12100:2010 Machinery Safety.

The product is only intended to be incorporated into or assembled with other machinery or other partly completed machinery or equipment, thereby forming machinery to which Directive 2006/42/EC applies.

The product may only be used within the limits specified in these mounting instructions and in the applicable documents. The applicable documents are also part of the product.

The machinery must not be put into service until the machinery into which the product has been incorporated has been determined and declared in conformity with the provisions of Directive 2006/42/EC and with all other applicable directives and regulations.

In addition, perform a risk assessment in view of the planned application, according to an approved risk assessment method, and implement the appropriate safety measures, based on the results of the risk assessment. Take into account the consequences of installing or integrating the product into a system or plant.

When using the product, perform all work and all other activities in conjunction with the product in compliance with the conditions specified in the mounting instructions, in the applicable documents, and in the nameplate, as well as with all directives, standards, and safety regulations applicable at the installation site of the product

GENERAL INFORMATION

1.4 Purchaser responsibilities

The system integrator (the person who incorporates the product in a machine pursuant to Directive 2006/42/EC, i.e., for example, the machine builder) and/or the operator must ensure the following:

- The application and use of the product must be limited to the specified intended use.
- In the integration of the product, all functional safety requirements must be met.
- All directives, standards, and safety regulations, including all regulations concerning workplace safety and prevention of accidents, applicable at the installation site of the product must be complied with.
- Any type whatsoever on and with the product may only be performed by qualified personnel.
- The product may only be operated when it is in flawless, fully functional condition.
- All safety equipment must operate as required and planned.
- The personal protective equipment for the personnel/operator must be available and must be used.
- The mounting instructions and all applicable documents must always be accessible in their entirety to the personnel at the installation site of the product.
- Safety instructions, labels, and any other information attached to the product must not be removed.
- A complete manual must be available for the machine into which the product is incorporated, this manual must describe all types of work on and with the machine and contain all information relevant with regard to the product.

1.5 Purpose of the document

The operating manual is intended to help the user, familiarize user with the machine and its intended application possibilities.

Observation of this information will help avoid hazards, reduce repair costs and standstill times and increase the reliability and service life of the machine.

Notes on precautionary measures to be taken by the machine owner:

- Employ only personnel with the necessary qualification for the work in hand to operate the machine.
- Define clear responsibilities and authorities for the operating and maintenance personnel.
- Supplement the operating manual with rules derived from the national occupational health and safety and environmental protection regulations.
- Instruct the person to read the operating manual and its additions, and check compliance from time to time. Have one copy of the operating manual available at the place of operation of the machine at all times.
- Operate the machine only when it is in a technically safe condition and take measures to maintain this safety.

1.6 Maintenance

For maintenance and spare parts contact PACKAM at the locations mentioned above (1.1.1)

SAFETY

2. SAFETY

2.1 Safety messages and hazard categories

These mounting instructions contain safety messages to alert you to potential hazards and risks. Safety messages in these mounting instructions are highlighted with warning symbols and warning words.

The signal word describes the source of the hazard. The text contains instructions on how to avoid the hazard as well as the consequence resulting from failure to follow the instructions given in the safety message.

Depending on the severity of a hazard, the safety messages are classified according to different hazard categories.

⚠ DANGER

Danger: Indicate[s] a hazardous situation which, if not avoided, will result in death or serious injury.

⚠ WARNING

Warning: Indicate[s] a hazardous situation which, if not avoided, could result in death or serious injury.

⚠ CAUTION

Caution: Indicate[s] a hazardous situation which, if not avoided, could result in minor or moderate injury.

NOTICE

Notice: [this header is] preferred to address practices not related to personal injury.

In addition to the instructions and safety messages provided in these mounting instructions, you must comply with all directives, standards, and safety regulations applicable at the installation site of the product.

2.2 Hazard symbols

The following symbols are used in these mounting instructions:

This is the general safety alert symbol. It alerts to injury hazards or equipment damage. Comply with all safety instructions in conjunction with this symbol to help avoid possible death, injury, or equipment damage.

This symbol alerts to hazardous electrical voltage. If this symbol is used in a safety message, there is a hazard of electric shock.

Hazard of injury to hand

Moving and Rotating Equipment

SAFETY

2.3 Qualification of personnel

Only trained personnel who have fully read and understood the mounting instructions and all applicable documents for the product may perform work on and with the product.

These trained personnel must have sufficient technical training, knowledge, and experience, and be able to foresee and detect potential hazards that may be caused by using the product.

All trained personnel working on and with the product must be fully familiar with all directives, standards and safety regulations that must be observed for performing such work.

2.4 Personal protective equipment

Always wear the required personal protective equipments.

When performing work on and with the product, take into account that hazards may be present at the installation site which do not directly result from the product itself.

When performing any type of work on or with the product, wear non-slip protective shoes, protective goggles, and tight clothing.

The personal protective equipment (PPE) described below must be provided by the machine owner and be worn by the responsible operating personnel when working with the machine.

Ware protective gloves	
Ware safety shoes	
Ware ear protectors	
Ware a safety helmet	
Ware a safety glasses	

PRODUCT DESCRIPTION

3. PRODUCT DESCRIPTION

3.1 Design Overview

The LC SERIES product consists of the following components:

Precision Link Conveyor - Bill of Material		
Sr. No.	Description	QTY
1	Indexer	1
2	Drive End Module (D)	1
3	Center Module (P/Q/R/S/U/V)	Depends on Length of conveyor
4	Take-up Module (T)	1
5	Mounting Support	Depends on Length of conveyor
6	Lifting Plate	2

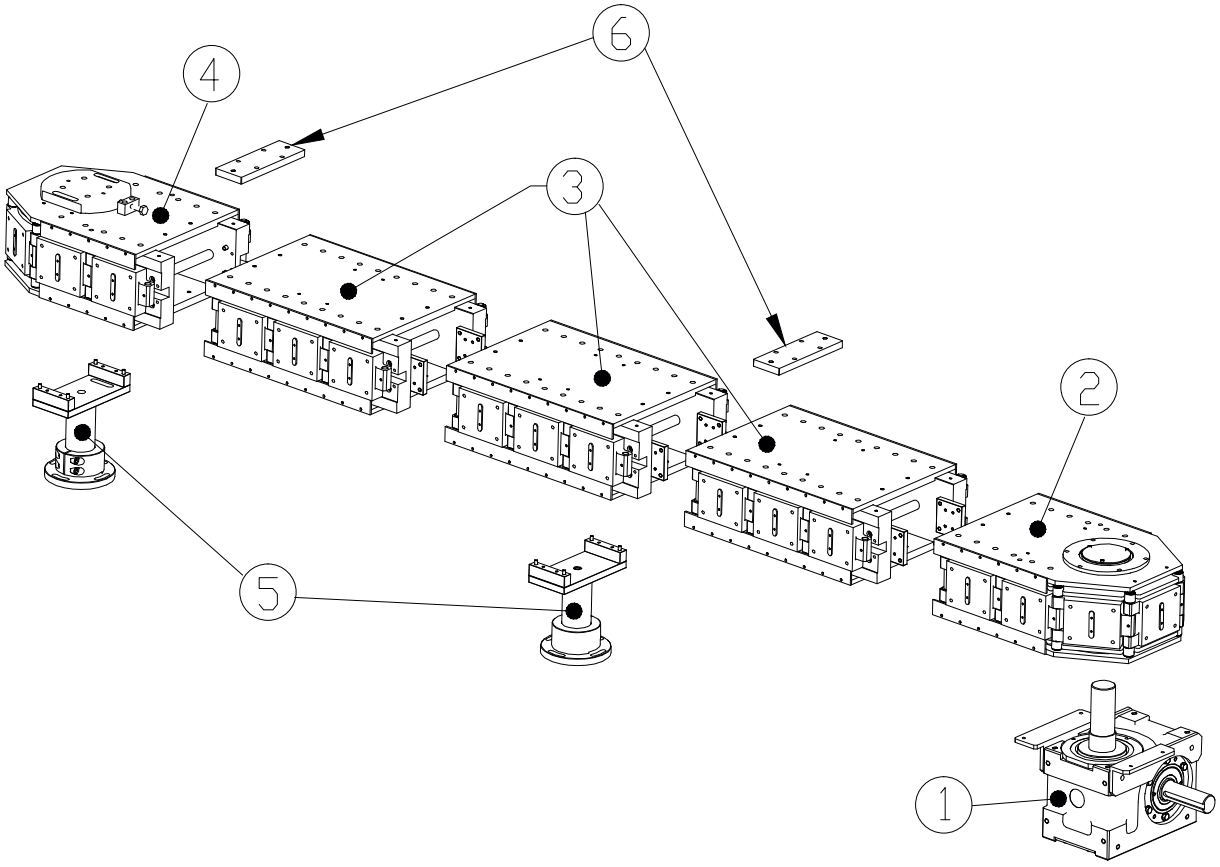

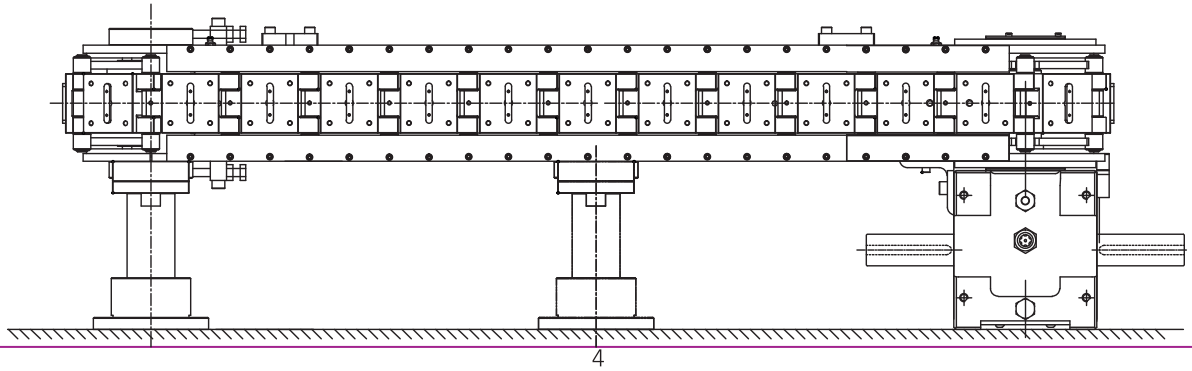

PRODUCT DESCRIPTION

3.2 Range of Products

Precision Link Conveyor

	LC100	LC150	LC200
◆	100mm	150mm	200mm

◆ Linear Indexing Distance (Stroke)

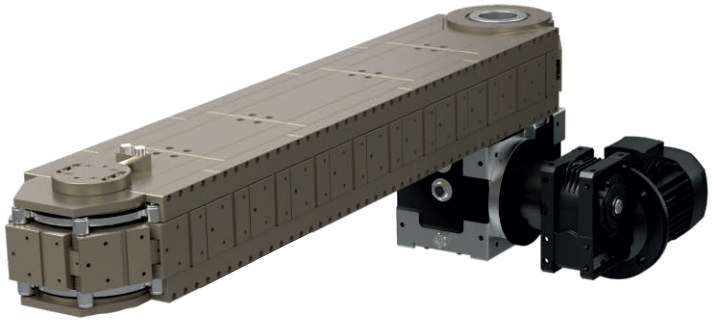

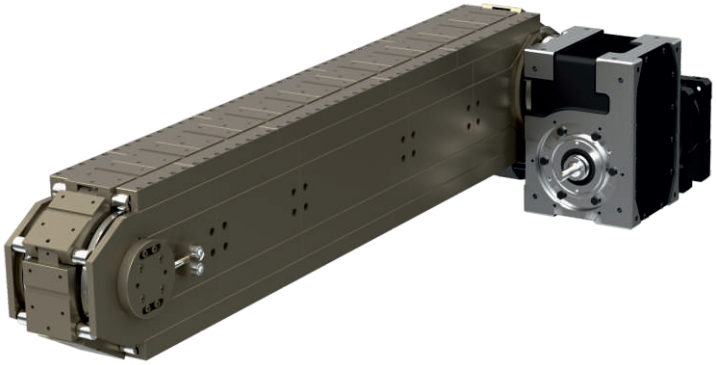

PRODUCT DESCRIPTION

3.3 Function description

The LC Series conveyor is a pre-loaded link assembly driven by the indexer, designed to precisely move loads at a predetermined length with zero-backlash. This machine is exactly defined as incomplete machinery that has no specific function / output until incorporated into a complete machine.

Continuous or synchronous mode

When operating in a continuous mode the brake is released and the motor is started either with a motor starter or with a Variable Frequency Drive (VFD)

The VFD is not manufactured by PACKAM. Refer to documentation supplied by the manufacturer for installation instructions.

The VFD allows adjustment to the speed of the motor. The output of the indexer is moved intermittently by the internal cam while the motor and camshaft run constantly. The brake can be used to stop the indexer either for a normal stop or emergency stop.

Cycle-on-demand mode (Start/Stop)

Cycle-on-Demand consists of a single complete 360 degree turn of the camshaft followed by a stopping of the indexer cam shaft in the middle of its dwell portion. For a Type 2 indexer one complete cycle is one half or 180 degree turn of the cam shaft. Once all machine operations have completed the cycle is repeated. A VFD cycling drive or brake motor can be used to start and stop the indexer in dwell. A cycle is initiated by an operator or the PLC or by some mode of signaling.

The sensor on the unit detects the target on the cam shaft as the camshaft turns into the dwell position. The sensor sends a signal to the PLC/VFD to stop the motor. It may be necessary to advance the mounting position of the sensor to assure the indexer stopping point.

Setting the Proximity Sensor is shown below:

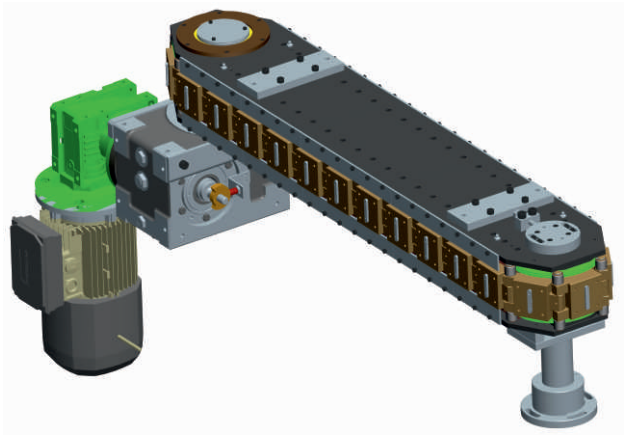

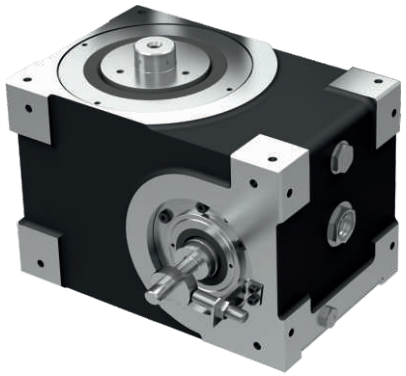

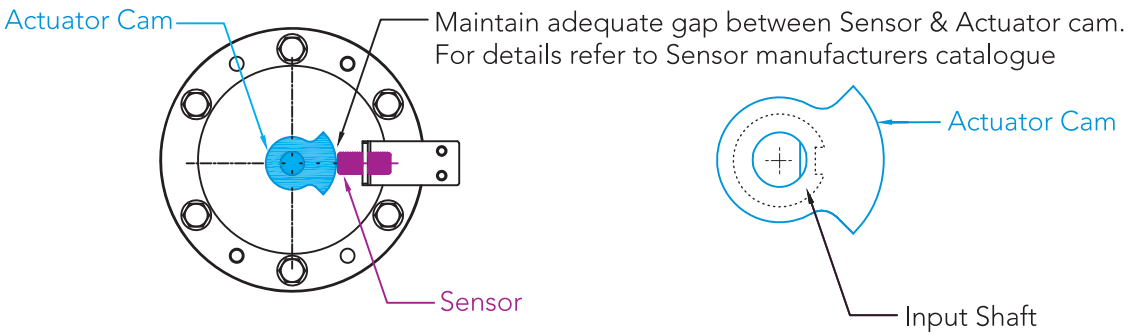

PRODUCT DESCRIPTION

3.4 Name Plate

The nameplate is attached to the housing of the product; it contains the following information:

Name Plate

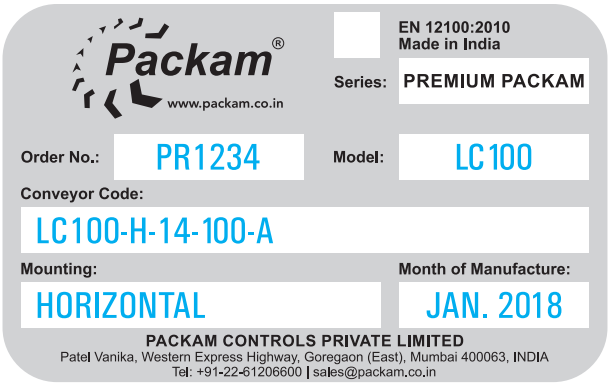

3.5 Mechanism Code

Link Conveyor Code (LC)

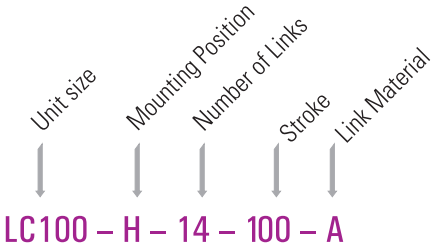

Code Details

Unit Size	LC100
Mounting Position	H or V
Number of Links	14
Stroke	100
Link Material	A (Aluminium) or S (Steel)

Mounting:
H= Horizontal (carousal)
V= Vertical (over-under)

Link Material:
A= Aluminum Link
S= Steel Link

Special:
Electroless Nickel Plating (ENP)
for medical applications

PRODUCT DESCRIPTION

3.6 Mounting Positions

Mounting position for Precision Link Conveyor: LC

LC

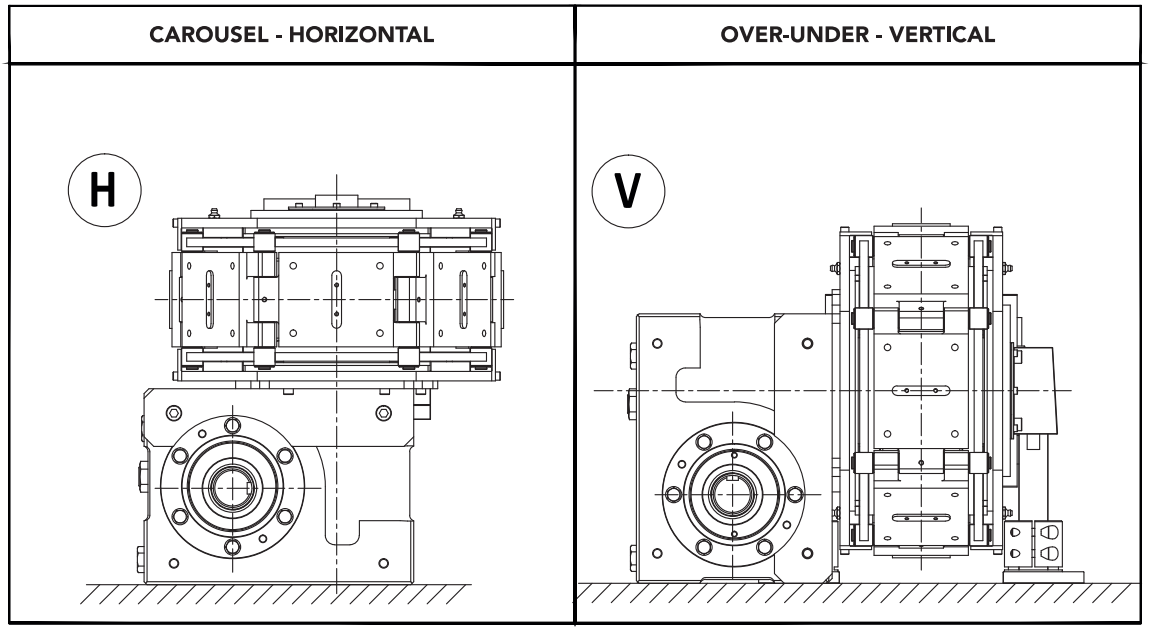

NOTICE

OIL LEAKAGE OR DRY RUN DUE TO INCORRECT MOUNTING POSITION

Verify that you only use the standard mounting positions approved in these mounting instructions and given in application data

PRODUCT DESCRIPTION

3.7 Indexer Mounting Positions

INDEXER POSITION FOR CAROUSEL MOUNTING

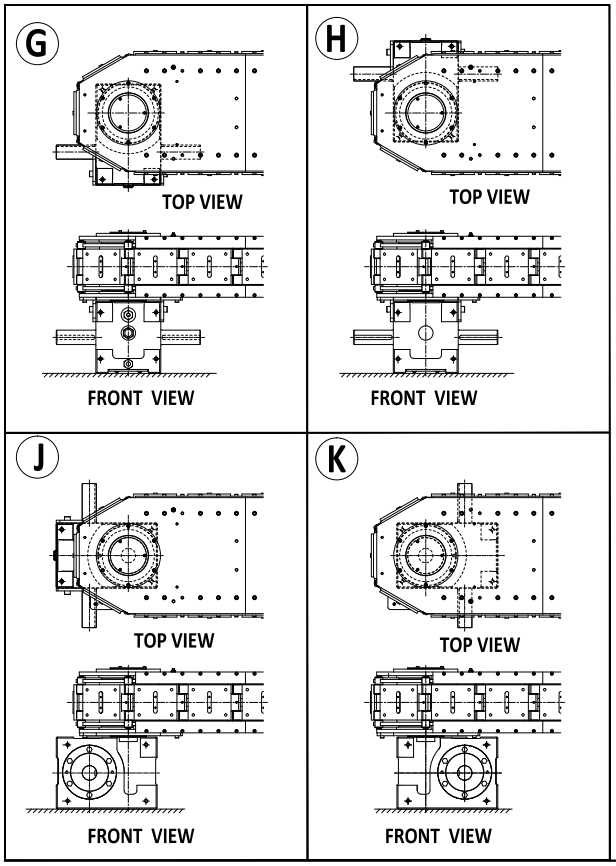

INDEXER POSITION FOR OVER-UNDER MOUNTING

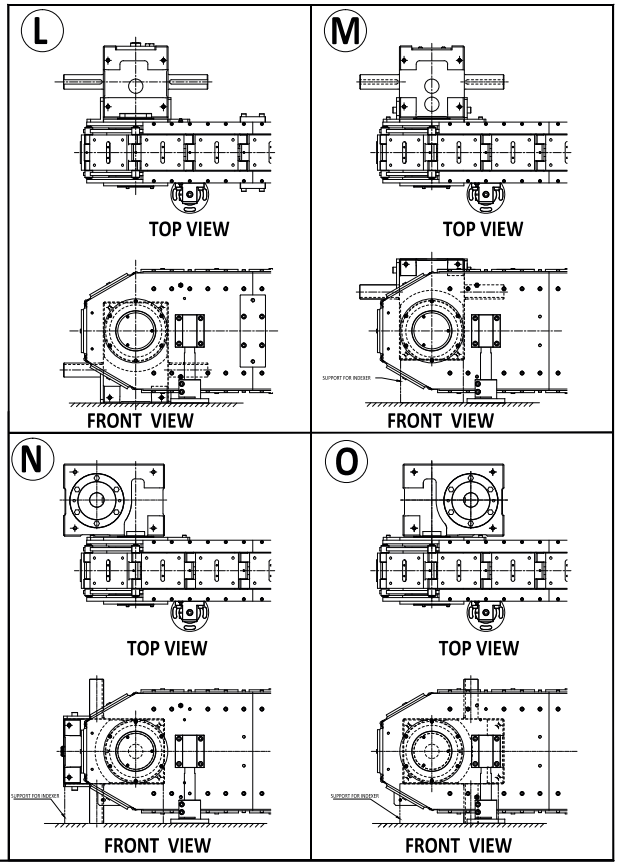

PRODUCT DESCRIPTION

3.8 Drive Options

Typical drive positions are shown below: for other positions, contact Packam.

1CC

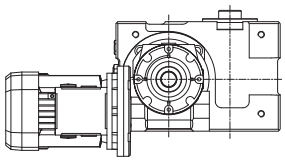

1CD

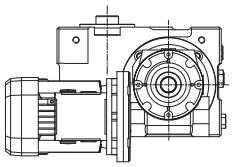

1DC

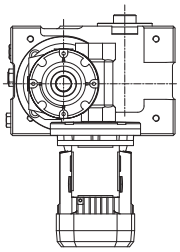

1DD

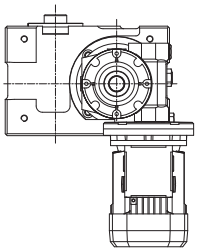

2CC

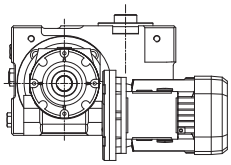

2CD

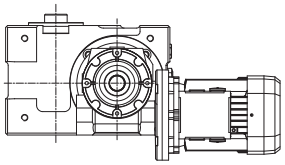

2DC

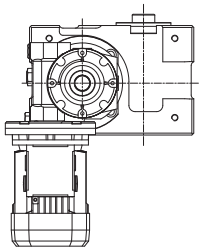

2DD

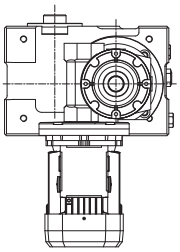

PRODUCT DESCRIPTION

3.10.2 Technical data motor and brake

See the operating instructions of the motor manufacturer for the technical data of the motor and the brake.

3.10.3 Electrical connections

See operating instructions of the motor manufacturer for the technical data of the electrical connections.

3.10.4 Climatic environmental conditions operation

Characteristic	Unit	Value
Ambient temperature:		°C +10 ... +40
Maximum surface temperature:		°C +70

3.10.5 Climatic environmental conditions transportation and storage

Characteristic	Unit	Value
Ambient temperature		°C +5 ... +60

Maximum service life of the mechanical components for 4 Years

NOTICE **Service life depends on models and application data**

Conditions for specified maximum storage duration:

- Storage in original packaging
- Compliance with all specified storage conditions
- Storage in suitable closed, dry, dust-free room, protected against direct sunlight
- No contact with corrosive media
- Corrosion protection intact

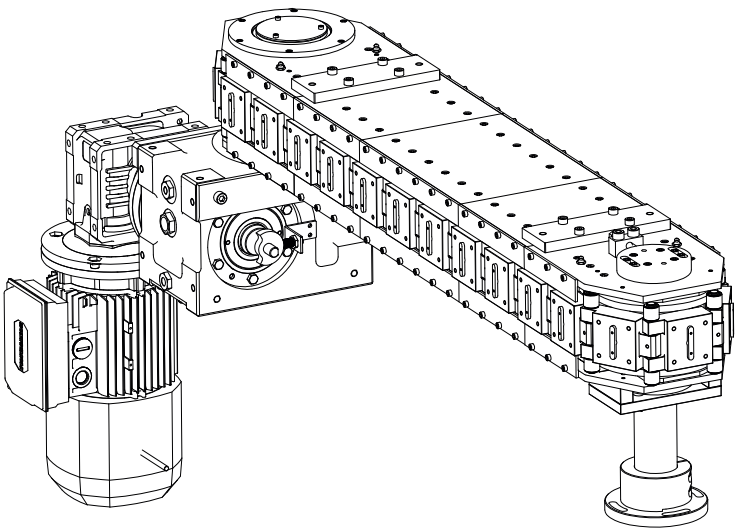

PRODUCT DESCRIPTION

3.10.9 Sensor & Mounting Bracket

Sensor

OMRON

M12 Size
Pre-wired Models (Shielded)
Short Body

MODEL: E2B-M12KS02-WP-B1 2M

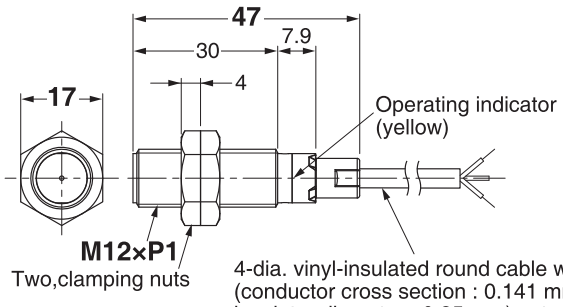

Standard sensor supplied with package for COD applications (cycle-on-demand)

Mounting Bracket

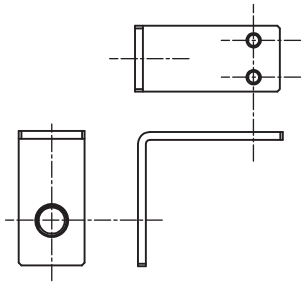

Sensor

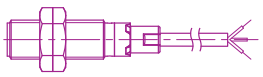

Actuator Cam (Timing Cam)

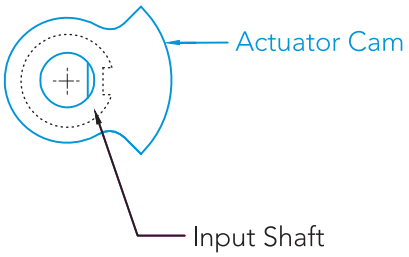

Assembly Details

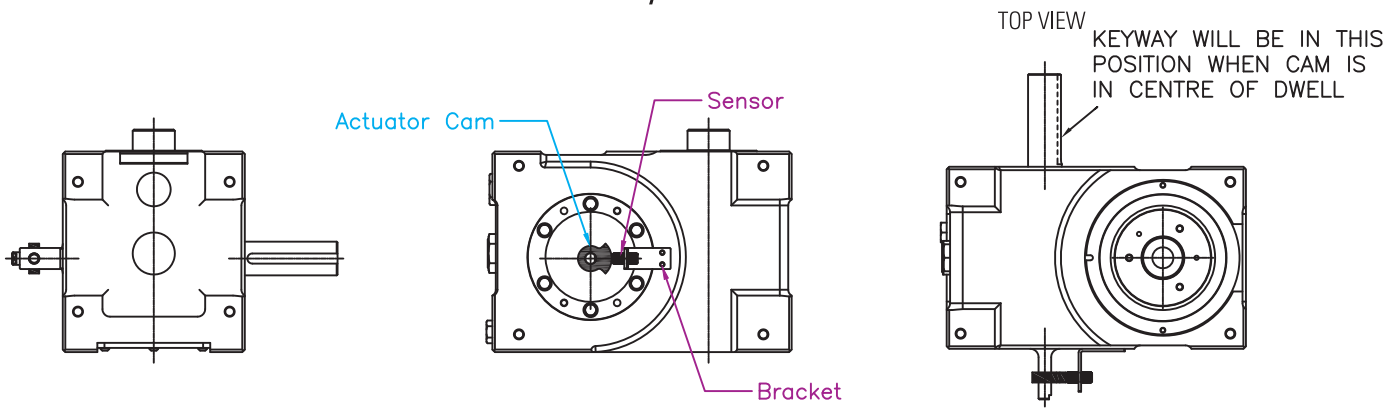

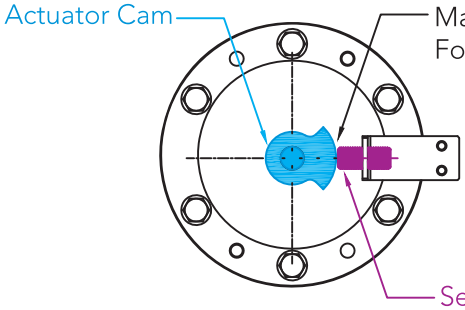

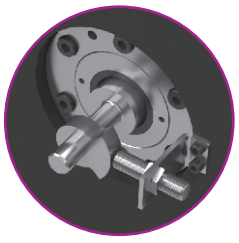

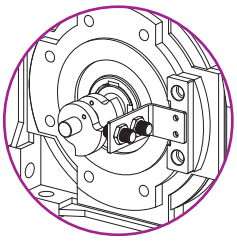

TECHNICAL FEATURES

4. TECHNICAL FEATURES

4.1 Dimensions, center of gravity and weights

The following table shows overall dimensions, indicating positions to determine relevant center of gravity and weights.

These values correspond to standard linear conveyors, therefore in case of special tables (e.g. motorization pre-setting, motorized tables, tables equipped with extended hubs, special shafts other accessories) they must be reconsidered on a case by case basis.

MODEL	X	Y	Z	No. of Eyebolts	Tapping Size	WEIGHT KG
LC100	depends on requirement mentioned in application data			4	M10	depends on the length
LC150				4	M10	
LC200				4	M12	

NOTICE For LC series CG position, Weight depends on the length given in application data

NOTICE Crane capacity should be two times of weight of unit

TECHNICAL FEATURES

CENTRE OF GRAVITY

LC Type

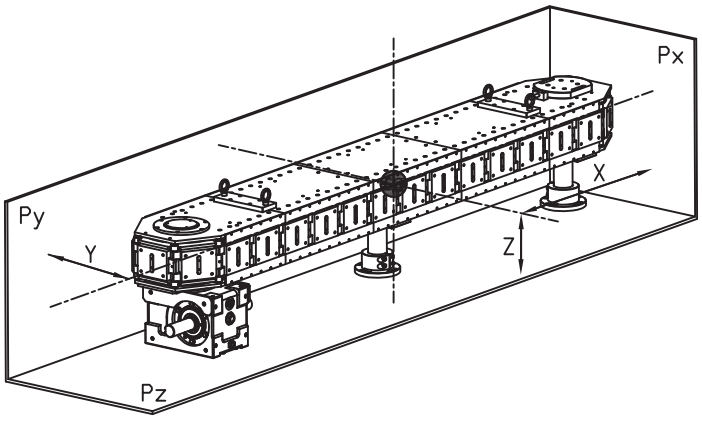

4.2 Noise

- Acoustic pressure at continuous level is lower than 90 dB.
- Soundproofing installations on the machine must be functional during operation.
- Wear the prescribed personal protective equipment (ear protectors)

PRODUCT HANDLING

5. Transportation

5.1 Verification of the delivery

- Check the delivery for completeness and transportation damage upon reception. Checking to be done within 24 hours
- In the case of damage, reject the delivery or accept it only conditionally.
- Document the damage in the transportation documents/bill of delivery (any damage detected must be immediately reported to the forwarding agent and confirmed by the forwarding agent).
- Take photographs of the damage.
- Report the damage to PACKAM.

5.2 Packaging

Mechanical components

The product is factory packed - treated with anti-corrosion agent, wrapped in a VCI coated plastic sheet (Volatile Corrosion Inhibitors) and then bolted at the bottom of a wooden box.

Wooden box is fumigated. Fumigation is a method of killing pests, termites or any other harmful living organisms to prevent transfer of exotic organisms. The Wooden box is also internally lined with a thin sheet of tarpaulin to provide additional protection from moisture during transport.

PRODUCT HANDLING

Electrical components (Sensor)

The electrical components are packaged in cardboard boxes.

1. Do not remove the packaging until immediately prior to mounting.

5.3 Transporting of Unit and Other Parts

The transport may only be carried out by personnel capable of carrying out such work as a result of their own know-how and experience in the field of transport.

The unit and larger assemblies must be carefully attached and secured to lifting equipment. Use only suitable lifting equipment and slings in a technically safe condition and with a sufficient load-bearing strength. Do not stand or work under suspended loads.

Allow only experienced persons to attach loads to lifting equipment,

Installing and removing transport locks on the machine parts.

NOTICE

Dispose of the packaging and insulating materials in a proper and environmentally safe manner. Observe the national regulations.

⚠ WARNING

FALLING, TILTING, OR LOWERING LOADS

- Insufficiently rated load lifting and handling equipment may break. Transportation vehicles, lifting gear, chains, belts, and other equipment not rated for the product may fail or tilt.
- Only use transportation vehicles, lifting gear, chains, belts, and other lifting and handling equipment that comply with all applicable regulations and that are rated for the weight of the product including packaging.
- Verify that there are no persons in the danger zone.
- Verify that clear pathway, while transportation.
- Verify that the product is properly secured against falling and tilting.

PRODUCT HANDLING

DANGER Failure to follow these instructions can result in death, serious injury, and equipment damage.

1. Use properly rated load lifting and handling equipment and hoisting belts/hoisting equipment for transporting the product.
2. Screw the load lifting and handling equipment into the outer threads of the rotary plate.
3. Type Number of pieces of load lifting and handling equipment Refer to: Dimensions, center of gravity and weights
3. Fasten the hoisting belts or the hoisting equipment to the eyelets of the load lifting or load handling equipment

5.4 Unpacking

The packaging materials should be re-used, as far as possible, or disposed of in accordance with the applicable local regulations.

5.5 Handling

Fixtures and Hoists Installation

Link Conveyor can be heavy and therefore must be handled with the appropriate lifting devices. There are lifting holes provided for use with eyebolts where a crane or similar lifting device must be used.

Attach eyebolts to points on PACKAM conveyor. Attach hook to reducer. Lift with long chains – included angles between chains should be less than 90 degrees.

DO NOT LIFT THE LINK CONVEYOR BY HOLD OR ATTACHING ANY LIFTING DEVICE TO ANY PART OTHER THAN SPECIFIED.

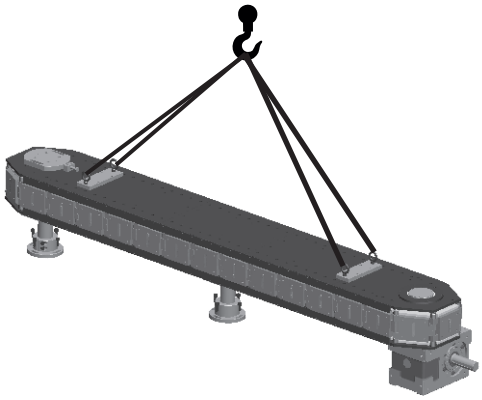

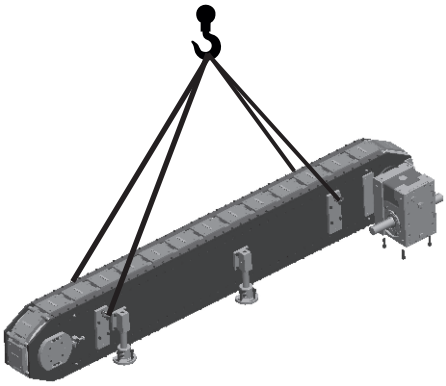

Markings and Weight

The following table illustrates the appropriate markings for transport placed on the unit's packaging.

The unit's weight can be obtained from the table 4.1 Dimensions, center of gravity and weights

5.6 Transportation Equipment & Procedures

This section discusses necessary and recommended installation equipment and procedures

Transportation Inside of Packaging

EQUIPMENT

- Lifting straps/chains with safety hooks
- Lifting frame
- Forklift/Crane
- Proper PPE: gloves, glasses, footwear

PREPARATION

- Check to make sure only authorized personnel are present.
- Set clear path of transportation that is clearly marked and closed off.
- Inspect package for any weak or damaged areas.

PRODUCT HANDLING

NOTICE The weight provided is an average, not an exact value, of the unit.

⚠ WARNING Use a hoist or a crane to lift. Attach hooks to eye bolts at four points on the top of the conveyor as shown in point number 5.5

Transportation Outside of Packaging

EQUIPMENT:

01. Lifting straps/chains
02. Metric eyebolts
03. Forklift/Crane
04. Proper PPE: gloves, glasses, footwear

PREPARATION:

01. Carefully unpack the unit making sure to preserve packaging.
02. Review and verify contents comply with the packaging list.
03. Inspect and document key unit areas for damage or leaks.

EXECUTION:

01. Place eye-bolts in lifting holes ;firmly screw into place.
02. Attach lifting straps/chains to eyebolts.
03. Use a forklift/crane to lift unit.
04. Move the unit to desired location of installation and slowly place on the floor in a safe, pre-assigned area marked appropriately.

Transportation Damage

Inspect the following areas of the unit for any signs of damage after transportation:

Housing Assembly: dents, cracks, bends, leaks

Output Assembly: seal (leaks), dents, looseness, flatness (a level should be fine in this application as a noticeable change in flatness due to damage is the measurement being observed not the function parameter).

- Input Assembly: seal (leaks), dents

NOTICE **In the event of damage after transportation do not proceed with installation until contacting the manufacturer.**

PRODUCT HANDLING

5.7 Storage

NOTICE

INCORRECT STORAGE

- Verify compliance with all conditions specified in these mounting instructions and all applicable documents when storing the product.

Failure to follow these instructions can result in equipment damage.

Units must be stored in a dry room and table surfaces which have not been protected must be spread with antioxidant protective oil.

The mechanical components can be stored for a period of up to one year.

The electrical components (for example, the motor and the sensor) have a different maximum storage period (see operating instructions of the manufacturers).

If the maximum storage period has been exceeded, you must contact the manufacturer prior to commissioning the product. This also applies if the machine in which the product has been incorporated has not been operated for a period of time exceeding the maximum storage periods specified for the mechanical and electrical components.

If the product is to be stored for a period of more than three months, the product must first be preserved. If the factory-applied anti-corrosion agent is no longer intact, you must request preservation instructions from the manufacturer.

Intermediate Storage

In the event of a need for storage for a delayed period of time (1 week +) retain the unit within its original packaging.

The original packaging is conditioned to preserve the unit in most environmental settings (save extreme ones).

INSTALLATION & COMMISSIONING

6. **Installing and Commissioning**

Lifting pointsMeasure now the distance from the bottom of the conveyor (opposite side of the driver) and the top plate of the basement: the distance must be equal to the value 'A'.

Then control the distance 'X' and 'Y' are the same.

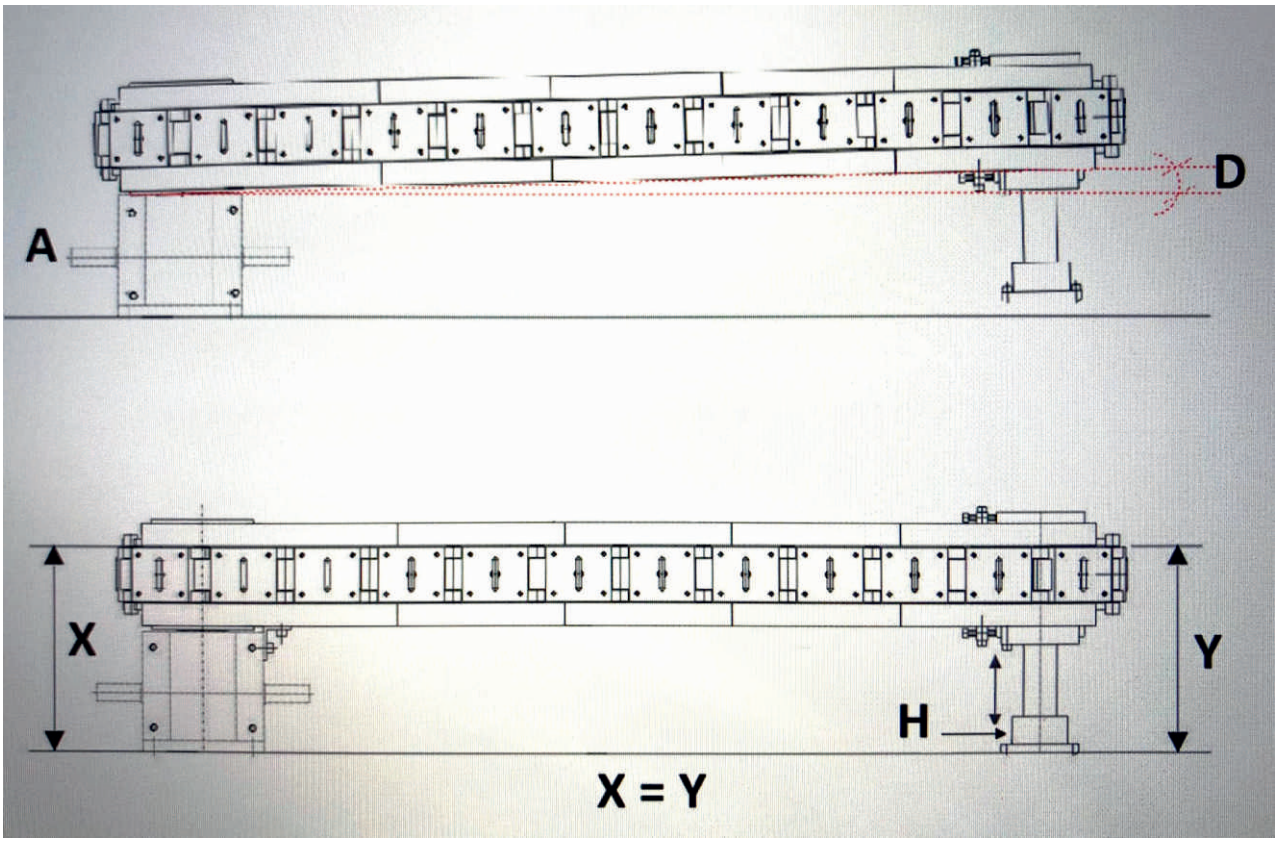

⚠ WARNING

DO NOT ADJUST / TOUCH THE SETTINGS OF THE TENSIONING BOLTS

THIS SETTING HAS BEEN DONE BY FACTORY BASED ON APPLICATION LOAD SPECIFIED AT THE TIME OF ORDERING.

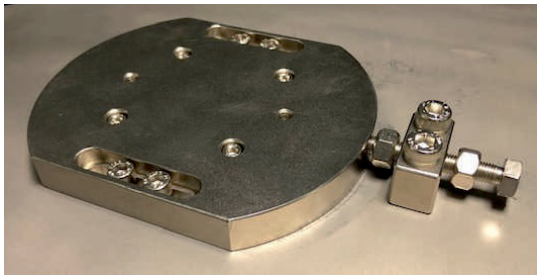

INSTALLATION & COMMISSIONING

6. Installing and Commissioning

6.1 Labels & marking

Lifting points

Lifting Point Symbols

Direction of rotation (if applicable)

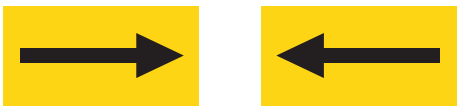

Direction of Motion or Rotation Symbol

NOTICE Direction of rotation depends on application data given by end user

Lubrication Points

Greasing Point Symbol

General

General Symbol

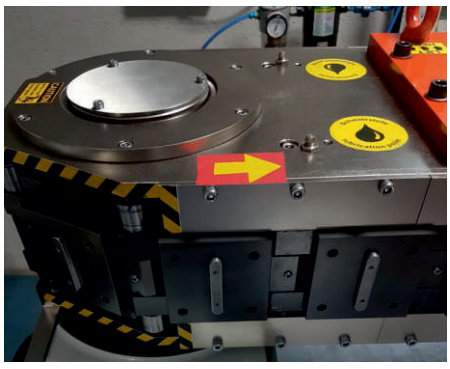

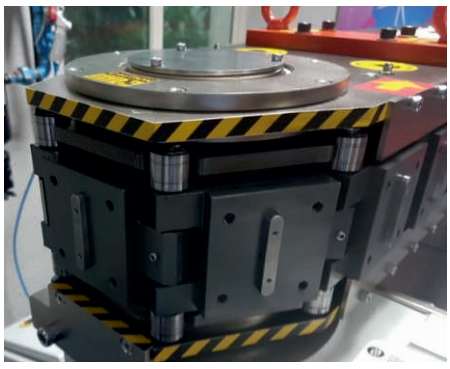

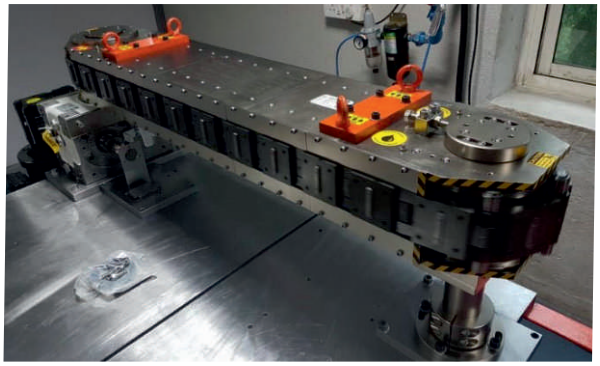

INSTALLATION & COMMISSIONING

6.2 Unboxing

TYPE: LC

The machine must be installed on a firm, low-vibration surface in a dry, frost-free, ventilated room.

The unit must be fastened to a rigid and stable support by means of screws located at the bottom of the housing. In addition some types of products are equipped with pinholes located at the bottom of the housing.

In particular, LC100, LC150, LC200, series link conveyor are equipped with through holes on mounting support and stable support by means of screws located at the bottom of the link conveyor.

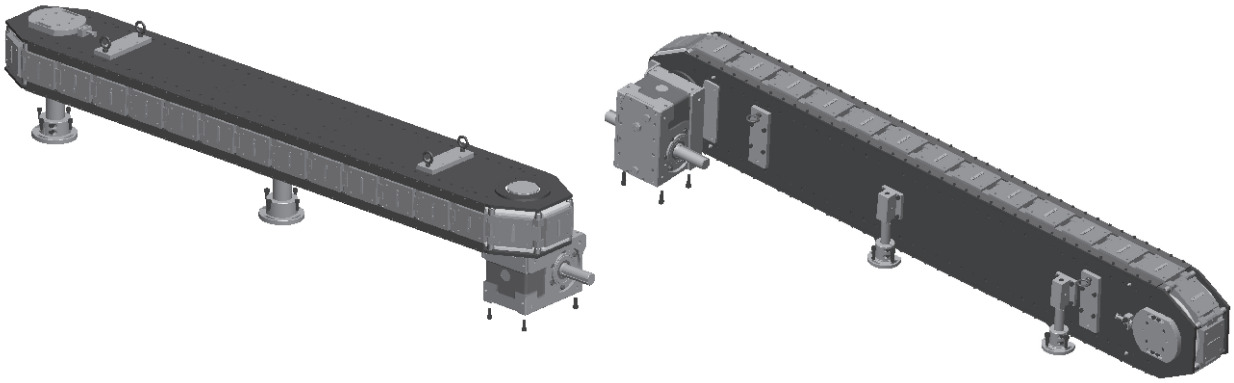

Equipment and Tools

The following is required for mounting:

- 1 x set wrenches
- 1 x set of hex keys
- 1 x set screwdrivers
- Torque wrench
- Plastic hammer
- Vernier calliper
- Threadlocker, for example Loctite ® 243
- Standard solvent
- Mounting grease
- Brush (for mounting grease)
- Screws of property class 10.9 (coefficient of friction upto 0.12)

Thread	M8	M10	M12	M16	M20
Tightening torque	34Nm	68Nm	117Nm	285Nm	557Nm

INSTALLATION & COMMISSIONING

OIL LOSS OR DRY RUN DUE TO INCORRECT MOUNTING POSITION

- Verify that you only use the standard mounting positions approved in these mounting instructions.
- Only use special mounting positions if such special mounting positions have been approved by the manufacturer in writing.

Hazard of injury to hand:
- Verify that there are no hand in the danger zone or mounting area, while installing the equipment

NOTICE Good accessibility to the machine must be ensured at all times to permit simple and safe operation of the machine. The machine footprint and space requirements indicated in the technical data must be observed.

NOTICE The machine may only be operated in an environment having adequate lighting in accordance with the ergonomic regulations.

NOTICE **Failure to instructions can result in equipment damage.**

Re-commissioning

⚠ WARNING The following hazards may be present during this Life-Phase of the unit.

⚠ WARNING Re-commission introduces the hazard of unsafe operation. Make sure only authorized personnel are present for re-commissioning and unit hazard- areas are visually inspected.

Please also verify the following items:
- No damage to mounting surfaces/plates
- No arbitrary equipment (used for repairs etc.) left unattended on the dial plate or near the unit
- All other complimentary machinery has been tested and is fully operational
- All safety equipment is operational and active
- Once all hazards have been addressed and visual inspection passed proceed with normal commissioning procedures

INSTALLATION & COMMISSIONING

6.3 Starting

Ambient temperature

Temperature must range from 0°C to 60°C.

Working condition

The general starting point of the unit will start with the keyway of the input shaft pointing towards the output shaft, where the cam will be in the middle of its dwell portion.

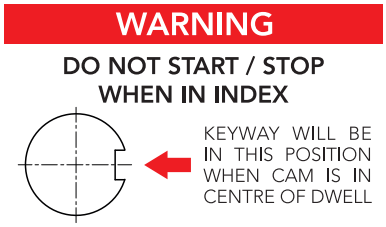

6.4 Drive

Be sure to connect the input shaft to the driving gear properly. Driving gear connection must ensure total absence of torsional backlash and accurate concentricity.

Oil and vent plug replacement

If indexer is supplied with oil, the breather plug is replaced with a magnetic plug to avoid leakage of lubricant during transport.

Before starting operation, replace the magnetic plug with the breather plug as shown in the sketch below. Spare breather plug will supplied with the unit if purchased with oil.

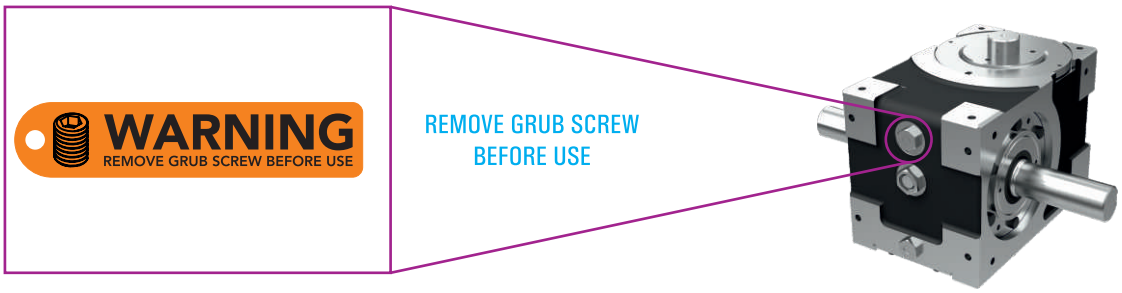

6.5 Stop

The general stopping point of the unit will be with the keyway of the input shaft pointing towards the output shaft, where the cam will be in the middle of its dwell portion.

INSTALLATION & COMMISSIONING

6.6 Mounting Positions vs Oil Plugs Positions

MOUNTING POSITION 1	MOUNTING POSITION 2
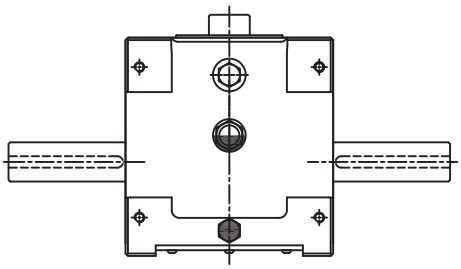	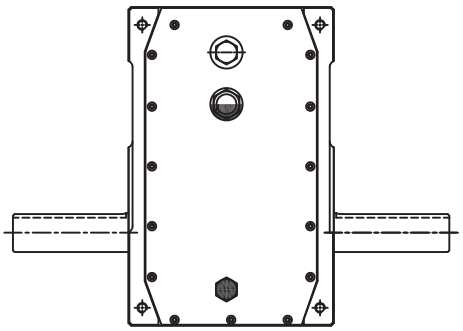

OPERATION

7. OPERATION

7.1 Units performance

Units are mechanical components where the uniform rotation of the input shaft is transformed in intermittent motion of the output shaft.

7.2 Static loads

The table is equipped with bearings in order to support radial loads, axial loads and overturning moments. It is necessary that axial load, radial load and overturning moment values applied to the link conveyor are lower than maximum allowable values shown in the general catalogue.

7.3 Torque

A correct and safe use of the unit implies the respect of allowable torque values owing to mass action inertia, friction and presence of working forces considered as external forces with respect to the system.

Fasteners clamping force refer below table

CLAMPING FORCE & APPLIED TORQUE - BOLTS & NUTS (ISO Metric)												
	CLAMPING FORCE (kN)				APPLIED TORQUE (Nm)							
	PROPERTY CLASS				PC 8.8/8		PC 9.8/9		PC 10.9/10		PC 12.9/12	
	8.8/8	9.8/9	10.9/10	12.9/12	MIN.	MAX.	MIN.	MAX.	MIN.	MAX.	MIN.	MAX.
M3	2.2	-	3.1	3.7	1.1	1.6	-	-	1.4	2.2	1.7	2.6
M4	3.8	-	5.5	6.4	2.5	3.7	-	-	3.7	5.3	4	5.7
M5	6.2	6.9	8.9	10.4	5	7.4	5.6	8.2	7.2	10.6	8	11.6
M6	8.7	9.8	12.5	14.6	8.4	12.4	9.5	14	12.1	17.8	13.5	19.5
M8	15.9	17.8	22.8	26.6	20	30	23	34	29	43	33	47
M10	25.3	28.3	36.1	42.2	41	60	46	68	59	85	65	94
M12	36.7	41.1	52.5	61.4	71	105	80	118	102	150	114	164
M14	50	56.1	71.6	84	112	168	127	187	161	240	182	265
M16	68.2	76.5	97.5	114	175	260	198	292	250	371	282	406
M18	86.2	-	119	140	255	372	-	-	353	513	390	560
M20	110	-	152	178	355	520	-	-	491	718	550	795
M22	136	-	189	220	500	705	-	-	675	969	750	1080
M24	159	-	220	256	620	928	-	-	857	1283	950	1370

Note: Clamping force specified is equal to 75 % of the proof load of the property classes of blots as given in ISO898/1

OPERATION

7.4 Wrong use risks

If static load values applied to the link conveyor are too high, they will lead to the following risks:

- Non-conformity of precision tolerances
- Bearings-premature wear
- Bearing structural failure
- Vibration

If torque values applied to the link conveyor are too high, they will lead to the following risks:

- Unit premature wear, followers

In particular

- Unit damage or breaking: cam followers and cam

7.5 Residual risks

Although the units are designed in conformity with standard safety requirements (see below table), there are still some residual risks which can be eliminated only during table assembling on final users machine. Particular caution is recommended when assembling movable parts to prevent the following risks:

MOVABLE PART	TYPE OF RISK
Drive end Module (2)	Crushing Cutting Entangling Dragging
Take-up end Module (4)	Crushing Cutting Entangling Dragging

⚠ WARNING

MOVING PARTS

■ Verify that the zone of operation of the moving product/machine parts is safeguarded by equipment user.

Failure to follow these instructions can result in death, serious injury, and equipment damage.

SERVICE AND MAINTENANCE

7.6 Unauthorized uses

⚠ WARNING	Operation of the unit presents the hazard of thermal contact. It is therefore recommended to allow the unit time to cool before performing any maintenance.
⚠ WARNING	The complexity of servicing the unit presents the hazard of human error. It is therefore recommended only technicians perform maintenance.
⚠ WARNING	MISSING PROTECTIVE EQUIPMENT Operation of the unit presents the hazard of material inhalation. The unit can produce brake and metal dusts. It is therefore recommended to wear a proper PPE mask and clean any dust debris from the unit and motor prior to maintenance. Immediately reinstall protective equipment that you may have removed to perform maintenance work after having completed the maintenance work and verify the effectiveness of the protective equipment. **Failure to follow these instructions can result in death, serious injury, and equipment damage.**
⚠ WARNING	Maintenance of the unit presents the hazards of slipping. Lubricants can spill/spread during maintenance of the unit, it is therefore recommended to keep the workspace clean at all times during maintenance to avoid slipping.
⚠ WARNING	UNANTICIPATED MOVEMENT OF THE ROTARY PART Block or safeguard the rotary plate in such a way that a movement of the rotary part is safely prevented before releasing the brake or decoupling the drive and the rotary plate. **Failure to follow these instructions can result in death, serious injury, and equipment damage.**
⚠ WARNING	MOVING PARTS ■ Verify that the zone of operation of the moving product/machine parts is safeguarded. **Failure to follow these instructions can result in death, serious injury, and equipment damage.**

NOTICE **Always wear the required personal protective equipment.**

When performing work on and with the product, take into account that hazards may be present at the installation site which do not directly result from the product itself.

When performing any type of work on or with the product, wear non-slip protective shoes, protective goggles, and tight clothing.

If it is necessary to remove safety installations, these must be installed again and checked for proper function immediately on completion of the work.

Observe the setting, maintenance and inspection operations prescribed in the operating manual, including information on the replacement of parts/parts of the equipment! Observe the specified intervals! This work may only be carried out by specially trained and authorized specialist personnel.

In order that safety can be assured during work on the machine or on the technical installation, all types of power supply (electric, pneumatic) must be switched off and secured to prevent switching on with the machine at standstill! Pressurized systems must be relieved!

During installation work above head height, use the provided or other safe access ladders and working platforms. Do not use machine parts as climbing aids! When working at great heights, take measures to prevent falling, e.g. in the form of railing or safety harnesses!

Always securely retighten all screw fittings loosened during service and maintenance work!

Carry out starting and stopping operations for all work as described in the operating manual!

Regular inspection and maintenance of the machine is of great importance. It reduces the occurrence of malfunctions and increases the operational safety.

Dispose of process media, cleansing agents and replaced parts in a safe and environmentally friendly manner! Observe the manufacturers' instructions for hazardous substances!

SERVICE AND MAINTENANCE

8. Service and Maintenance

8.1 Maintenance

Do not allow liquids to come into contact with live parts!

In order that safety can be assured during work on the machine or on the technical installation, all types of power supply (electric, hydraulic, pneumatic) must be switched off and secured to prevent switching on with the machine at standstill! Pressurized systems must be relieved!

In order to avoid the risk of injury, do not reach into the running machine. Moving parts and parts behind guards may only be cleaned with the machine switched off and secured to prevent restarting.

The machine must be kept clean at all times during operation. This means also keeping the floor clean, clearing away packaging materials, chemicals, etc. and not leaving tools lying around.

Do not use compressed air to clean the machine. This can result in increased wear and malfunctions. Use only a soft brush in combination with a vacuum cleaner for cleaning. A cloth moistened with alcohol can also be used.

Remove oil, fuel or protective agents from the machine, and in particular from connections and screw fittings, before starting service and maintenance work! Do not use aggressive cleaning agents! Use lint free cleaning cloths with the help of PPE!

After cleaning, inspect all supply lines for leaks, loose connections, signs of abrasion and damage!

Remedy faults discovered immediately!

8.2 Preventive maintenance

Check the oil level with different mounting position as shown below:

IDEALLY THE DESIRED OIL LEVEL MUST BE BETWEEN THE MIDDLE LEVEL UP TO THREE FOURTH LEVEL OF THE WINDOW

CAUTION

OIL DETAILS

Multigrade hypoid gear oil confirming to:
SAE 75W-90 / SAE 80W-90 / API GL4 with EP (extreme pressure) additives - preferably with antioxidant and anti-foam additives.

OIL CHANGE INTERVALS
REFER TO INSTALLATION MANUAL

CAUTION

MAINTAIN OIL LEVEL

Periodically check & topup if required

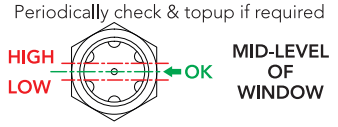

Note: Overfilling will result in leakage

⚠ CAUTION

INDEXER: An oil change is required every 4000 hours of operation, or every twelve months whichever occurs first. Where operating conditions are severe, such as rapid rise and fall in temperature of the indexer housing (which is accompanied by sweating of the inside walls with a resulting formation of sludge), where operation is in moist and dusty atmosphere and contaminations can be drawn in through the breather plug, or in the presence of chemical fumes, it may be necessary to change the oil in intervals of three to six months.

For heavily loaded units and units that run at speeds higher than 150 rev/min, we recommend changing the oil regularly at intervals of 2000 hours of operation. This means that units must be assembled into the machine with easy access for oil change. There must be a regular check for the correct oil level by the user.

LINK CONVEYOR: Grease lubrication is required every 150 hours of operation, or every 15 days whichever occurs first. For lubrication locations, see point 8.3 - For high speed application above 80 index/minute grease lubrication to be done weekly.

NOTICE

The magnetic drain plug should be visually inspected at oil change time for metallic chips that might indicate failure of one of the internal components.

⚠ CAUTION

Remove the lube oil from the unit and discard in conformity with the reference rule for oil (AGIPBLASIA 320) and petroleum grease (AGIP GR MU/EP) disposal

OIL FILLING DETAILS:

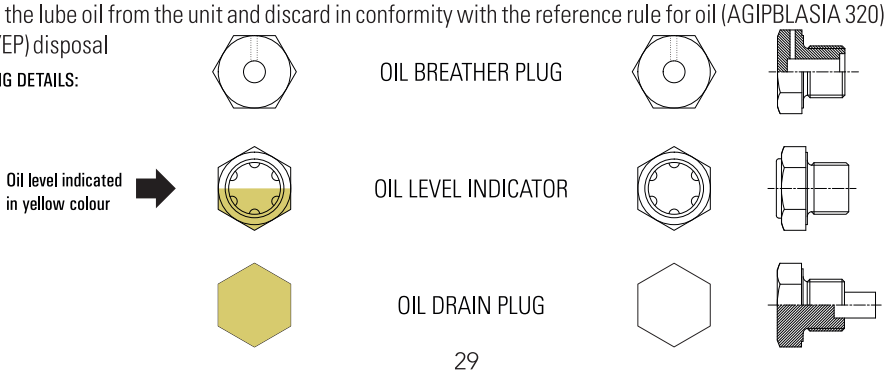

SERVICE AND MAINTENANCE

Lubrication Details

Multigrade Hypoid Gear Oil confirming to:

- SAE 75W-90 EP
- SAE 80W-90 EP
- API GL4 EP

With EP (extreme pressure) additives and preferably with antioxidant and anti-foam additives.

Recommended Brands:

SERVICE AND MAINTENANCE

8.3 Lubrication Points

Lubrication Points

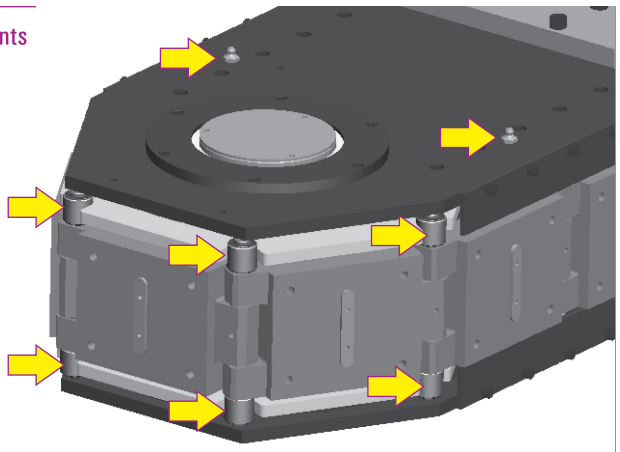

Lubrication Points

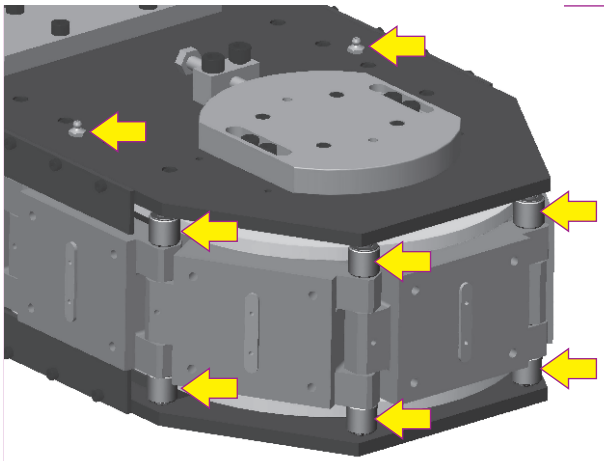

8.4 Grease Details

DESCRIPTION

High Performance LITHOX Grease series

FEATURES AND BENEFITS

- Extreme pressure additives provide high load carrying capacity
- Excellent pumpability
- Long term lubrication for bearings
- Greases stay in place in heavily loaded condition
- Resist water washout
- Provide adequate rust protection
- Products formulated in varying consistencies to suit conditions of pump ability in different centralized lubrication systems
- Wide range operating temperature band of -20 °C to 120 °C
- Extreme Pressure Industrial Grease
- Based on a blend of high viscosity mineral oils, lithium soap thickener and other performance additives

TYPICAL PHYSICAL CHARACTERISTICS

PACIFIC LITHOX Series		Series 00
NLGI Grade		#00
Appearance, Visual		Semi Fluid
Color, Visual		Yellowish
Base		Lithium
Base Oil		Mineral
Worked Penetration @ 25 °C, 0.1mm	ASTM D 217	400-430
Operating Temperature Range		-20/+120

SERVICE AND MAINTENANCE

8.5 Regular maintenance

CAM FOLLOWERS

Cam Followers should be checked monthly for excessive radial looseness. Cam followers with radial looseness indicate wear and should be replaced immediately. Axial play of the follower outer shell on the stud is normal. If radial play exceeds 0.013mm, the cam followers should be replaced.

Cracked or broken cam followers indicate overloading – replace followers and check for malfunction of overload protection. The stud should be lubricated and carefully aligned when it is pressed into the hole. Backlash at any station indicates worn or damaged cam followers or cam.

We recommend a periodical check for tightness of all connections on the IN and OUT transmission. Any play on such components would lead to improper performance and possibly early failure of the Link conveyor. Overload devices should be checked regularly for proper disengagement interval depends on the operating conditions. We recommend that this is done at least once per year. Packam recommends that only technicians experienced in Conveyor index drives maintenance make repairs. That is why all repairs if any are carried out at Packam workshop ONLY. Packam does not provide training or guidance to customer for repairs.

8.6 Run-in

For units with input shaft speeds higher than 75 rev/min, it is advisable to run the unit for approximately 12 hours at maximum 75 rev/min. Then check the quality of the oil and if judged necessary, change the oil before running at full speed. For slower speeds a smaller run-in of say 6 hrs is still recommended, since the units are tested at the factory on no load conditions only.

During the run-in of the machine the temperature of the indexing unit should be monitored. If the temperature of the housing rises above 75°C Packam should be notified. Temperatures of the housing above 75°C should be avoided as it could lead to damage of the unit if run over a long period at this temperature. Units which are specially built to run at high temperatures are excluded from this remark.

8.7 Breakdown maintenance

WHEN OPERATED AT RATED SPEEDS, PACKAM CONVEYOR INDEX DRIVES REQUIRE VIRTUALLY ZERO MAINTENANCE.

However in case of breakdown, if maintenance is required, the unit must be sent to Packam Workshop for all repairs. It is not advisable or recommended to open the unit at customers end. [Kindly refer to the Packam sales terms & conditions document available on our website]

9. SPARE PARTS

To obtain information on spare parts please contact PACKAM Service Team. The serial number of the unit and the part reference number from the exploded view found in this manual are required to process your request.

ONLY USE SPARES APPROVED BY PACKAM. FAILURE TO DO SO WILL RESULT IN EQUIPMENT DAMAGE AND SERIOUS INJURY INCASE EQUIPMENT MALFUNCTIONS.

Kindly direct you Spare Parts requirements to: Packam Service Team | service@packam.co.in

IMPORTANT FINAL CHECKLIST

10. IMPORTANT FINAL CHECKLIST

⚠ WARNING

- Unit has no external damage
- Oil is filled in indexer & grease lubrication is done on link conveyor
- Indexer is in centre of dwell
- All connected drives are well secured
- All moving parts of the machine are free and are in smooth motion
- Motor is adequately selected
- Compare the model selection data with actual data, such as:
    1. Load on link conveyor
    2. Linear stroke
    3. Speed at which conveyor will be running
    4. Motor and brake rating
    5. All other application data
    6. Mounting of link conveyor
- Run in test is performed

⚠ WARNING

Once in operation an indexer could suffer basically from three overload situations:

A. Stopping in mid-index

This occurs when the Mechanism is in motion and the drive unit is stopped either by cutting the power to the drive motor through an emergency stop or a power failure. For this situation the input drive can be equipped with a slipping clutch or similar device that would allow the stopping time to be extended to a safe amount avoiding overload to the drive unit.

B. Starting in mid-index

A similar overload can occur if the mechanism is started in the indexing section.
Note! Units are supplied with the Mechanism set at mid-dwell to eliminate start up overload.

C. Blocked output shaft at motion start

The forces applied to the output shaft at the beginning of the motion can theoretically be infinite. Typically this would be the case if there were interfering motions, for example alignment pins, which must be pulled away before the conveyor can be indexed. If the conveyor is started with the alignment pins still in the link (or any such jam situation), severe damage to the indexer & conveyor would be the result. To avoid such damage it is necessary to add a one-position locking overload device between the indexer and conveyor.

D. Overload

Overload situation can occur due to a multiple reasons: obstruction, jam condition, power failure, e-stop, electronic malfunction, over speeding, over loading, etc...

Overload Clutch are installed to protect the indexing equipment from costly downtime due to overload or jam conditions by quickly disengaging the drive system. That are fitted to Indexers to avoid damage to the equipment and not to protect persons. (Not supplied with indexers) The adjustments of overload devices must be such that at normal operation there is no disengagement.

PROBLEM SOLVING

11. PROBLEM SOLVING

When and if a problem is detected:

IMMEDIATELY STOP USING THE CONVEYOR

- Contact Packam representative - remember to mention the conveyor type and serial number in your communication. This will enable Packam to serve you at the earliest.

- Do not attempt to open the unit - warranty shall be void if the unit has been opened, tampered with or modified in any way.

Note: Packam recommends that only technicians experienced in index drives & link conveyors maintenance make repairs. That is why all repairs if any are carried out at Packam workshop ONLY.

Following are the check points if a problem is detected:

Troubleshooting and Fault Correction

Troubleshooting is defined in the following method and formats:

1. **Identifying the (Symptom:)**
2. **Identifying the (Cause)**
3. **Utilizing the given (Solution)**

Unless a specific solution for a cause of a symptom is unknown, contact the PCPL

Kindly direct you service requirements to: Packam Service Team | service@packam.co.in

Packam®

South Asia
EN ISO 12100:2010

Packam Controls Private Limited
Patel Vanika, Western Express Highway,
Goregaon (East) , Mumbai - 400 063, India

T +91 22 61206600
F +91 22 61206606
E info@packam.co.in
U www.packam.co.in

Domestic Sales Enquiry sales@packam.co.in
International Sales Enquiry export@packam.co.in
After Sales Service service@packam.co.in